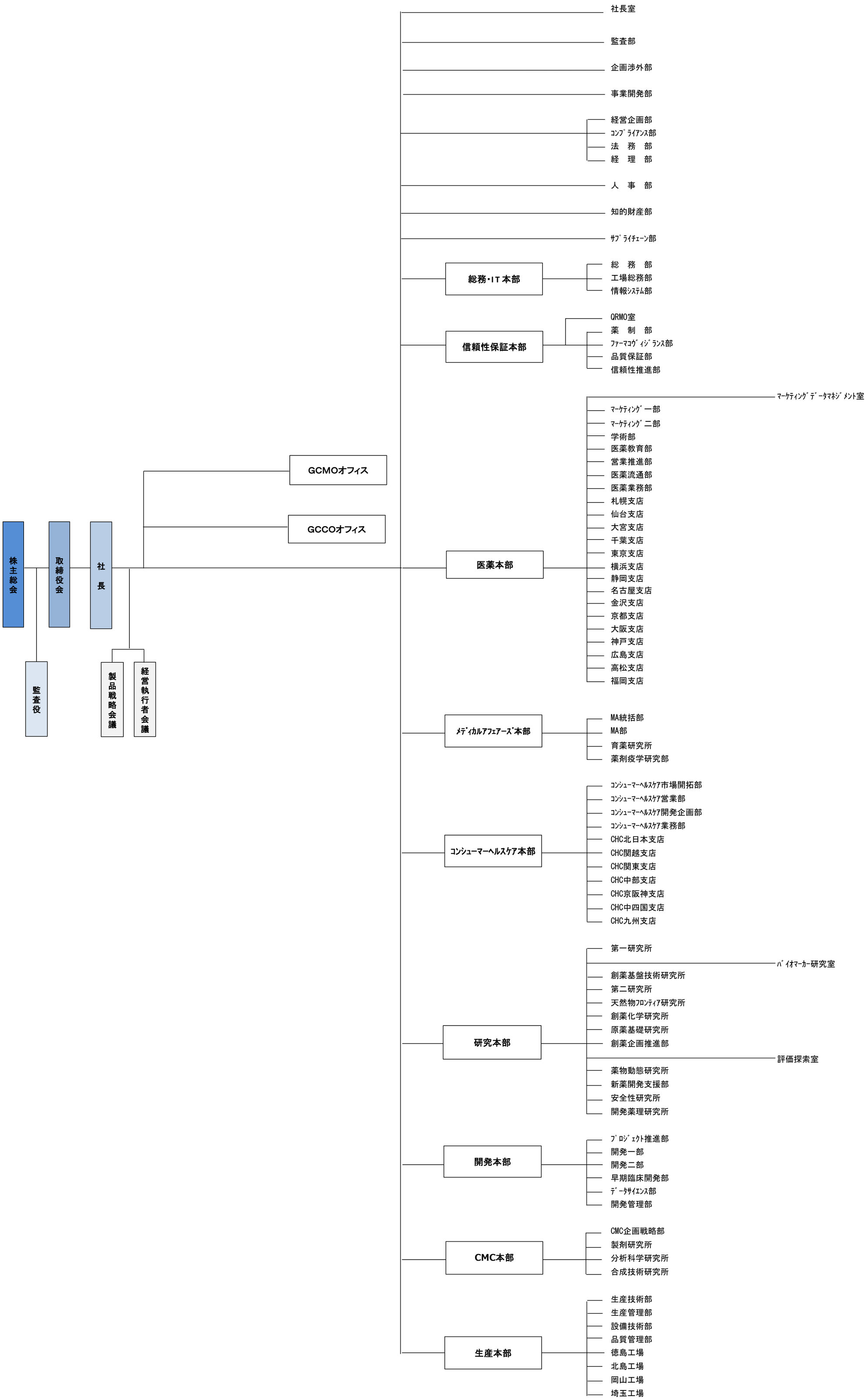

Copyright © Taiho Pharmaceutical Co., Ltd.